Dear Customer,

*You have just acquired a **DE DIETRICH** dishwasher and we would like to thank you.*

Our research teams have created this new generation of appliances for you. Their quality, design, features and technological advances make them exceptional products, and reveal our unique know-how.

*Your new **DE DIETRICH** dishwasher will blend harmoniously into your kitchen and will perfectly combine washing and drying performance and ease of use. We wanted to offer you a product of excellence.*

*In the **DE DIETRICH** product range, you will also find a wide choice of hobs, ovens, microwaves, hoods, cookers, fridges, freezers, that you can coordinate with your new **DE DIETRICH** dishwasher.*

*Visit our website **www.dedietrich-electromenager.com**, where you will find our latest innovations as well as useful and complementary information.*

DE DIETRICH
Setting New Values

As part of our commitment to constantly improving our products, we reserve the right to make changes to them based on technical advances to their technical and functional features and appearance.

Warning :
Before installing and using your appliance, please carefully read this Guide to Installation and Use, which will allow you to quickly familiarise yourself with its operation.

www.dedietrich-electromenager.com

EN

CONTENTS

1/ FOR THE USER'S ATTENTION
- Safety instructions 36
- Environmental protection 37
- Economical, environmentally friendly washing 37

2/ DESCRIPTION OF YOUR APPLIANCE
- General presentation of the dishwasher 38
- Presentation of the control panel 39

3/ INFORMATION 40

4/ WHAT TO DO BEFORE FIRST USING THE MACHINE
- Measure the water hardness and select the type of detergent 41
- Adjust the softener settings using the buttons 41

5/ CHOOSING PRODUCTS AND SETTINGS
- Choosing products 42
- Settings for multipurpose tablets 42

6/ LOADING PRODUCTS
- Loading washing products 43
- Loading regenerating salt 43
- The rinsing product 44

7/ ADJUSTING THE SETTINGS 45

8/ DISHWASHER FEATURES
- Drawers 47
- Cutlery basket 49
- Rack for large plates 49

9/ WASHING PROGRAMMES 50

10/ PROGRAMMING 52

11/ YOUR DISHWASHER'S SAFETY SYSTEMS 54

12/ CLEANING YOUR APPLIANCE
- Cleaning the waste filters 55

13/ IF OPERATING ABNORMALITIES OCCUR 57
- Changing the bulb 62

14/ AFTER-SALES SERVICE 63

15/ INDICATIONS FOR THE TESTING LABORATORIES 64

Important :
Keep this user's manual with your appliance. If the appliance is sold or transferred to someone else, ensure that the manual is with it. Please take note of these instructions before installing and using your appliance. They have been drawn up for your own and other people's safety.

• SAFETY INSTRUCTIONS

• Installation

– When you receive your appliance, unpack it or have it unpacked immediately. Check that it has not suffered any damage during transport. Express any reservations in writing on the delivery note, of which you keep a copy. Never connect up a damaged machine. If your appliance is damaged, please contact your dealer.
– Before proceeding to connect up your machine, please refer to the instructions in your Installation Guide.
– Your dishwasher must be kept disconnected from the mains supply throughout the whole of the installation process.
– The electrical connection details on your appliance's description plate must comply with those for the mains supply.
– The socket must still be accessible once your appliance has been installed.
– Do not alter or attempt to alter the appliance's characteristics. This could put you at risk.
– If your installation has to be altered, only entrust the electrical and plumbing work to a qualified electrician or plumber respectively.
– Your appliance is designed for normal domestic use. Do not use it for industrial or commercial purposes or for any other purpose than that for which it has been designed.
– The dishwasher's walls must not be pierced under any circumstances.

• Children's safety

– This appliance is not intended for use by young children or infirm persons unless they have been adequately supervised by a responsible person to ensure that they can use the appliance safely.
– This appliance must only be used by adults. Ensure that children do not touch it and do not use it as a toy. Ensure that they do not operate the appliance's controls.
– Keep young children away from the appliance when it is operating.
– Detergents contain irritant and abrasive substances. These products can have caustic effects on the eyes, the mouth or the throat. They can be extremely dangerous if ingested. Avoid any contact with the skin and the eyes. Ensure that the appliance's detergent container is empty at the end of the washing cycle.
– Place detergents out of children's reach and do not put any detergent in the machine until just before you start the washing programme.
– The water in your dishwasher is not drinking water; this is why children must not go near the appliance when its door is open.
– Do not let your children play or sit on the door when it is open.
– Once you have unpacked your appliance, place the packaging out of children's reach.
– Keep all the packaging materials (e.g. plastic bags, polystyrene, etc.) out of children's reach because they can be dangerous for children (ie. risk of suffocation).

• Use

– This appliance is not intended for use by persons (including children) with reduced physical, sensory or mental capabilities, or lack of experience and knowledge, unless they have been given supervision or instruction concerning use of the appliance by a person responsible for their safety.
– When machine is running, do not open door. This may provoke steam leakage or splattering of water.

– Only use products specially designed for your dishwasher (water softening salt, detergent and rinsing products).
– As far as possible, avoid opening the dishwasher's door when it is operating, and in particular during the heating phases, because scalding steam may escape or you may be splashed with hot water. The machine is fitted
with a safety system that immediately blocks the dishwasher's operation if the door is opened.
– Never use chemical solvents in your appliance because these could cause an explosion.
– Always close your appliance's door after loading or removing your items.
– Do not lean or sit on your appliance's door when it is open.
– You are strongly advised to disconnect the machine after use and turn off the water supply.
– Unplug your machine before carrying out any technical work on it.
– Avoid placing your machine immediately next to a cooking or heating appliance to prevent any risk of heat damage;
– Do not place any items in your machine, which are not certified as dishwasher safe.
– If you have removed an item before the end of the washing programme, it is important to rinse it carefully to remove any residual washing products.
– If your appliance breaks down, never attempt to repair it yourself. Any repairs made by non-qualified personnel can cause significant damage or lack of control.
– The machine complies with applicable safety regulations. Any repairs should be carried out by qualified technicians. Repairs or changes that do not conform may be dangerous for the users. In case of replacement, only use original parts.
– If the machine malfunctions due to other causes than those mentioned in this booklet, disconnect the machine (remove the plug) or break the circuit concerned and contact after-sales service.

• *ENVIRONMENTAL PROTECTION*

This appliance's packaging material is recyclable. Help recycle it and protect the environment by dropping it off in the municipal receptacles provided for this purpose.

Your appliance also contains a great amount of recyclable material. It is marked with this label to indicate that in countries that are a members of the European Union the used appliances should not be mixed with other waste. This way, the appliance recycling organised by your manufacturer will be done under the best possible conditions, in compliance with European Directive 2002/96/EC on Waste Electrical and Electronic Equipment. Contact your town hall or your retailer for the used appliance collection points closest to your home.
We thank you doing your part to protect the environment.

• *ECONOMICAL, ENVIRONMENTALLY FRIENDLY WASHING*

– Remove any food residue from your crockery (bones, pips, etc.)
– Do not pre-wash your items by hand (useless waste of water).
– Utilise your dishwasher's capabilities to the full for an economical, environmentally friendly wash.
– Always select a washing programme suitable for the crockery type and how dirty they are.
– Avoid overdosing with detergent, regenerating salt and rinsing liquid. Follow the recommendations in this guide (pages 42-43-44) and the instructions on the product packs.
– Ensure that the water softener is correctly set (see pages 41).

• *GENERAL PRESENTATION OF THE DISHWASHER*

Your **QUATTRO CONCEPT** Dishwasher features two totally independent washing spaces that can be used separately or simultaneously. This provides you with 4 washing modes:

- **PRIMO:** Wash both drawers simultaneously with the same washing programme.
- **SECUNDO:** Only wash the dishes stacked in the bottom drawer.
- **TERTIO:** Only wash the dishes stacked in the top drawer.
- **QUATTRO**: Washing two areas simultaneously but with different programmes.

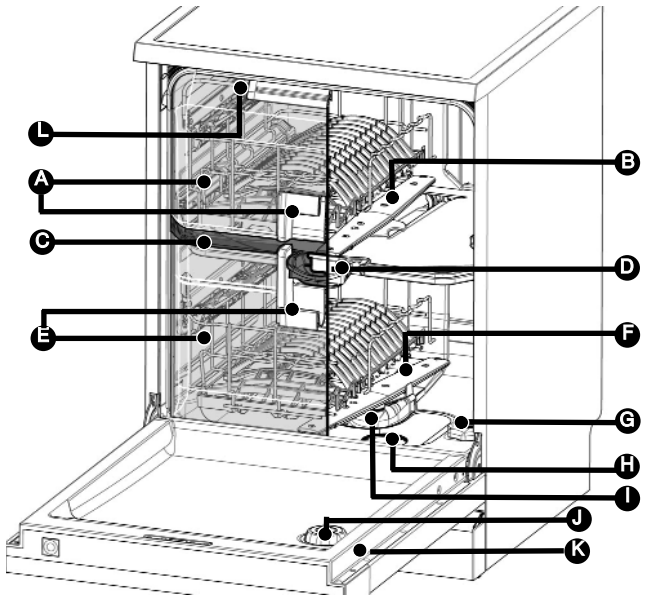

Fig. 01

- **A** *Handle, Top drawer*
- **B** *Top spray arm*
- **C** *Partition*
- **D** *Washing product distributor*
- **E** *Handle, Bottom drawer*
- **F** *Bottom spray arm*
- **G** *Regenerating salt reservoir*
- **H** *Waste filter*
- **I** *Main filter*
- **J** *Rinsing product distributor*
- **K** *Nameplate (after-sales service ref.)*
- **L** *Interior lighting bulb (depending on model)*

Advice:
This user's guide is applicable to several models. There may be some slight differences in the details and the equipment between your appliance and the descriptions provided here.

• PRESENTATION OF THE CONTROL PANEL

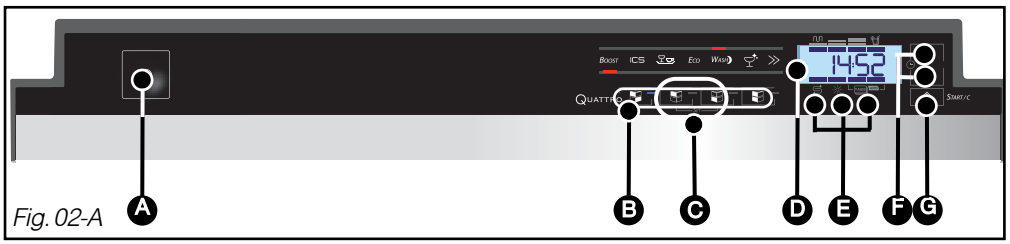

Fig. 02-A

A On/Off :
Button to start up the dishwasher.

B Choosing the drawer(s) to be washed and the corresponding programme(s):
Press one of the 4 buttons to choose the drawer(s) to be washed. Press the same button again to select the washing programme(s).

(see §10 “programming”)

C SET :
In the settings menu:
(see §7 “adjusting the settings”)
- set the current time,
- adjust the softener settings,
- activate or deactivate the “regenerating salt” and “rinsing product” indicators and the “TABS AUTO” function (depending on softener settings, described on the following pages).
- activate or deactivate the end of programme sound signal,
- set the screen's brightness

D The control panel screen:
Shows you, depending on the case, the current time, the time when the programme ends, the time remaining before the programme ends, the settings and the progress of the preheating function.

E The indicators:

Salt:
lit; indicates a lack of regenerating salt.

Rinsing liquid:
lit; indicates a lack of rinsing product.

Multipurpose products:
lit; indicates that the **“TABS AUTO”** function is activated. This means that the programmes are automatically adapted to the multipurpose tablets' usage.

F Delayed washing:
Programme the end time, in 15 min increments, by pressing the **+/-** buttons.

G START/C :
Press this button to start the programme.
If you make a mistake: to cancel a selection or programme in progress, keep your finger on the button for more than 2 seconds.

Advice:
A short audible signal (beep) confirm the button’s selection, except for the “On/Off” button.
To save energy, the display's lighting will fade or switch off after your dishwasher has not been used for a certain period of time.
To ease loading, the dishwasher’s internal light comes on when the door is opened and goes off when you push or close it, regardless of the position of the On/Off switch.

Important:
To obtain impeccable washing and drying results from your dishwasher without any marks, you must set it carefully using the water softening system, which utilises regenerating salt.

As rainwater infiltrates into the ground it picks up mineral salts; some minerals are found in solid form and are commonly called 'lime'. This reduces the detergent's washing performance and leaves white marks on the crockery.
The more lime there is in the water, the 'harder' the water is.

- Use the most suitable washing products for the hardness of your town's water supply.
- There are several types of products:

For an impeccable clean, opt for using traditional products together:

① ***Washing product*** for a perfect clean (standard powder, liquid or tablets).

② ***Regenerating salt*** for your dishwasher's water softener to work correctly.

③ ***Rinsing liquid*** to assist drying and eliminate drip marks.

Important:
Never use normal washing-up liquid.

For ease of use <u>and in certain water hardness conditions only (< 25°F), multi-purpose products</u> can make the use of regenerating salt and rinsing liquid unnecessary.

- ***"Two-in-one" tablets*** contain detergents and rinsing liquid or an agent serving the function of the salt.
- ***"Three-in-one" tablets*** contain detergents and rinsing liquid as well as an agent serving the function of the salt.
- ***"Four-in-one" "Five-in-one" tablets...*** also contain additives that prevent wear on poor quality glasses or the risk of stainless items corroding.

Important:
Follow the instructions in the user's manual and the recommendations on the multi-purpose detergent's pack.

NB:
If in any doubt, please contact the detergent's manufacturer if the items are very wet at the end of the programme or if chalky deposits appear.

Important:
Remove the setting parts inside the drawers and the protective film covering the control panel.

• MEASURE THE WATER HARDNESS AND SELECT THE TYPE OF DETERGENT: TRADITIONAL OR MULTI-PURPOSE

In one simple action, you can test the your water's lime content using the testing strip supplied with your dishwasher. Alternatively, contact your local water utility to ascertain your water's hardness.

– Let the water run from the tap for a few moments.
– Fill a glass with water.
– Take the test strip from its holder and immerse it for 3 seconds.
– Wait 1 minute, shake it and look at the colours to ascertain your water's hardness.

• ADJUST THE SOFTENER SETTINGS USING THE BUTTONS

– Bring up the settings menu by pressing the 2 "Set" function buttons ❶ once and at length. Next, press one of them again until you arrive at the correct softener setting (see §7 "Adjusting the settings").
– This is then displayed on the screen as a value between H0 and H6; the factory softener setting is H4.
– To adjust the setting from H0 to H6, depending on the hardness of the water, briefly and repeatedly press one of the two buttons "**+**" or "**-**"; the screen will display the setting:

Testing strip	□□□□□	■□□□□	■■□□□	■■■□□	■■■■□	■■■■■	
Hardness	0-10°F	10-18°F	18-25°F	25-40°F	40-55°F	55-70°F	> 70°F
Traditional product	H0	H1	H2	H3	H4	H5	H6

– Validation occurs automatically after around 10 seconds or by pressing ❶ one of the **"Set"** function buttons.
– You can leave the settings menu at any time by pressing the **"Start**/C**"** button ◇.

Important:
It is very important to set the water softener correctly.
- If the setting is too low, there is the risk of chalky marks appearing.
- if the setting is too high, there is the risk of causing clouding of the glasses.

If you relocate, adjust the water softener setting as required.

• CHOOSING PRODUCTS (*Only use products specially designed for dishwashers).*

Test strip	□□□□□	■□□□□	■■□□□	■■■□□	■■■■□	■■■■■	■■■■■
Hardness	0-10°F	10-18°F	18-25°F	25-40°F	40-55°F	55-70°F	> 70°F
Water	Soft	Slightly hard	Slightly hard	Hard	Hard	Hard	Very hard
Water softening and use of salt	Optional	Essential if using traditional products	Essential if using traditional products	Mandatory	Mandatory	Mandatory	Mandatory

Possible use of the following products ❶ or ❷

❶ [P or L or] + S + R

❷ **Multi-purpose**

Use only of traditional products ❶

[P or L or] + S + R

Use of multipurpose tablets remains possible with salt and rinsing product.

❶ *Traditional products:* P: Powder detergent or L: Liquid detergent
or single tablet + S: Regenerating Salt + R: Rinsing product

Important :
When using conventional products the "TABS AUTO" function should be deactivated: set to "OFF"

❷ *Multipurpose products:* "multipurpose" tablets

Important :
When using multipurpose products the "TABS AUTO" function should be activated: set to "ON" with possible selecting of "Sparkling Clean" or "Extra Dry".

Keep all these products out of reach of children and in a dry place.

• SETTINGS FOR MULTIPURPOSE TABLETS

Important :
The " TABS AUTO " function may only be adjusted for the H0, H1 and H2 softener settings (hardness < 25°F). You can deactivate the "salt" and "rinsing" product indicators if you are using multipurpose products; this setting is changed using the "SET" function.

• Adjust the " TABS AUTO " function settings as follows:

– Press one of the "Set" function buttons ❶ until the indicator " TABS AUTO " starts flashing. Next press one of the "+" or "-" buttons to select one of the 3 possible combinations:

OFF – deactivation of the " TABS AUTO " function.
On – activation of the " TABS AUTO " function with the "Sparkling Clean" setting.
"Sparkling Clean" is designed to make your dishes sparkle.
On – activation of the " TABS AUTO " function with the "Extra Dry" setting.
"Extra Dry" increases the drying power if your dishes are not dry enough.

– Your choice is confirmed automatically after about 10 seconds or by pressing "SET".
– The " TABS AUTO " indicator remains lit if the option has been selected.
– You can bring up the settings menu at any time by pressing the "**Start/C**" button .
(see §7 "Adjusting the settings").

❶ SET

• LOADING WASHING PRODUCTS

The product distributor is shared by the two drawers. It is designed for tablets, washing powder and washing liquid:

	POWDER/GEL	TABLETS
	Fill up to the 1/2 marker	1 TABLET
	LIGHTLY SOILED = Fill up to the 1/2 marker SOILED = Fill up to the MAX marker	1 TABLET HEAVILY SOILED = possibility of using 2 TABLETS

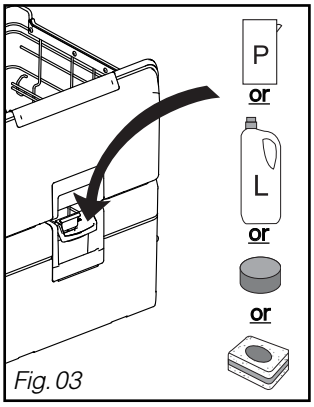

Fig. 03

• LOADING OF REGENERATING SALT

***Important:** Only use special dishwasher regenerating salt. Do not use table salt or any type of cooking salt, this could damage your appliance's water softener.*

① Unscrew and remove the stopper on the salt tank.

② Fill the tank with **regenerating salt** specially designed for dishwashers. Use the funnel supplied with your dishwasher.

③ The first time, **top up with water** up to the rim of the tank.

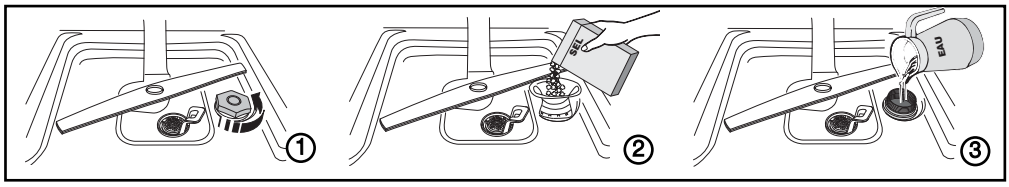

• Regenerating salt indicator:

This illuminates when salt must be added. After the tank has been filled with regenerating salt, the indicator light may remain lit until the salt has dissolved sufficiently, usually after one cycle (of if the tank has not been filled completely; for example, when first putting the machine into service using the sample). It may be deactivated when using multifunction tablets
(see para.7, Adjusting the settings).

***Important:** If the salt overflows, you should remove the salt crystals to avoid the risk of the reservoir corroding and carry out a soaking or quick programme (depending on model). Screw the reservoir plug back in as far as it will go.*

• *Loading of rinsing product (Fig. 04)*

Important:
Only use a rinsing product designed for dishwashers. The rinsing product ensures your items shine and are well dried.

①② When first putting the machine into service, fill the tank until the level is flush with the top of the adjustment lever.

The original setting is 3.
- Close completely.

• *Rinsing liquid indicator light:*

This illuminates when rinsing product is required.
It may be deactivated when using multifunction tablets (see para.7, Adjusting the settings).

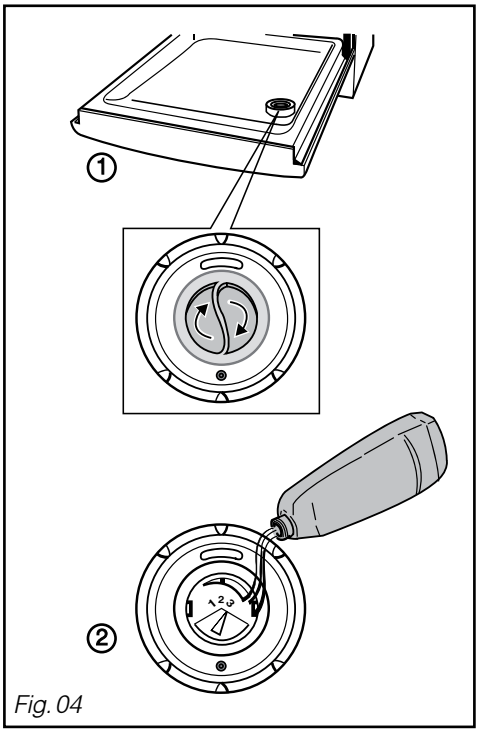

Fig. 04

Important:
If any of the product overflows during filling, sponge up the excess to avoid producing foam.

• SETTINGS POSSIBLE USING THE “SET” FUNCTION AND THE [+/−] SELECTION BUTTONS:

- ***You can access the settings menu by pressing the "SET" function's 2 buttons at length.***
- ***Then, briefly pressing one of the same buttons allows you to run through the various settings.***
- ***Adjust your settings by pressing the [+/−] selection buttons.***
- ***The settings are set automatically after 10 seconds. After that, your dishwasher returns to programme selection mode.***

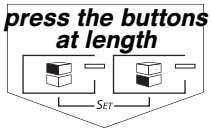

Menu access, automatic clock setting.

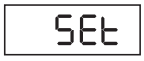

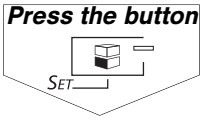

❶ *Setting the clock (hour)*

Once you have entered the settings menu, press one of the buttons [+/−] to set the desired time.

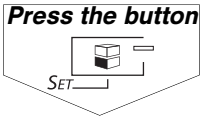

❷ *Setting the clock (minutes)*

As above; press the [+/−] buttons until the correct number of minutes is displayed.

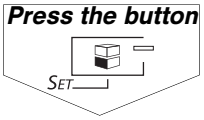

❸ *Adjusting the softener settings*

Set according to the corresponding degree of hardness measured, from H0 to H6.

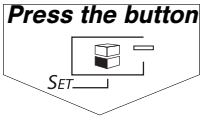

❹ *Product use*

For optimum product efficiency, it is important to set the softener correctly (see para. **5** Washing products and softener setting).

- **Salt** : Set to OFF if you do not use salt or f you are using multi-purpose tablets.

- **Rinsing product** : Set to OFF if you do not use a rinsing product or if you are using multi-purpose tablets.

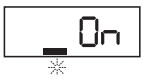

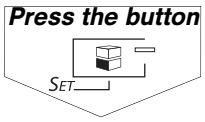

❺ *Multifunction tablets* TABS AUTO

available if softener settings are on H0, H1 *or* H2.

(see para. **5** Washing products and softener setting).
Once you have entered the settings menu, pressing one of the **+** or **–** buttons will allow you to:

- Deactivate the function if you do not use multipurpose tablets.

- Activate the function **"Sparkling Clean"**

- Activate the function **"extra dry"** (selected by default)

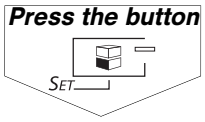

❻ *Beep at the end of the programme*

On to activate the function; OFF if you do not wish not to hear the beep at the end of the program.

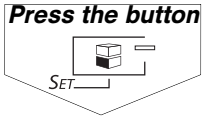

❼ *Screen brightness*

Set the screen brightness to suit yourself from L1 minimum to L5 maximum.

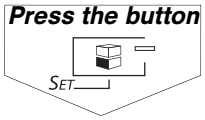

Exit settings menu, back to programme selection.

Advice:
The setting is confirmed automatically when you move on to the next parameter or if the "Set" button is not pressed again within the next 10 seconds.

Very important:
Items not suitable for washing in a dishwasher:
- Wooden cutting boards
- Stainless steel utensils or plastic utensils that are not heat-resistant
- Copper or pewter items
- Glued crockery and cutlery
- Cutlery with wooden, horn or mother-of-pearl handles
- Antique or hand-painted porcelain
When purchasing crockery, glasses or cutlery, ensure that it is dishwasher-safe.

Tip:
Remove any large debris from the dirty dishes before putting them in the dishwasher. This will improve the washing performance.

• *THE DISHWASHER DRAWERS*

Your QUATTRO CONCEPT Dishwasher's drawers feature identical layout for better modularity, making it possible to wash large and small plates, cutlery, cookware, cups, bowls, saucers and glasses whether you use the upper or the lower compartment *(Fig. 06-07)*.

QUATTRO CONCEPT makes it easy to wash many different load combinations:
Primo Mode: traditional loading
Secundo and Tertio Mode: one-drawer loading.
Quattro Mode: two-drawer loading with different programmes.

- Arrange your items so that the water can circulate freely and spray over all the utensils.
- Do not intersperse, jam together or superimpose flat plates and concave dishes.
- Arrange your items methodically to save on space: arranging glasses, cups or bowls together.

Tip:
Try to ensure that any plates are not in contact. If necessary, leave some empty spaces.

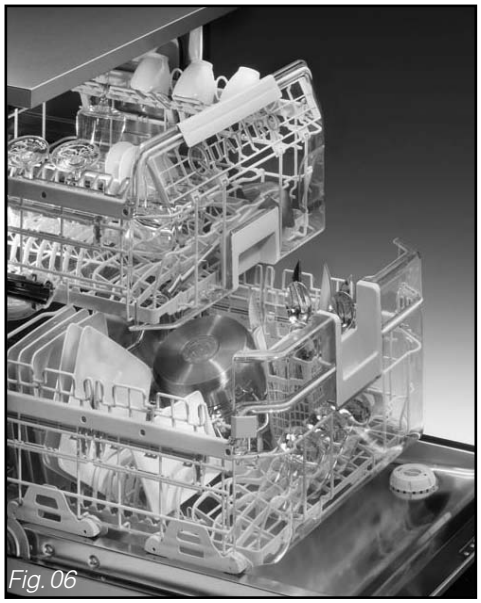
Fig. 06

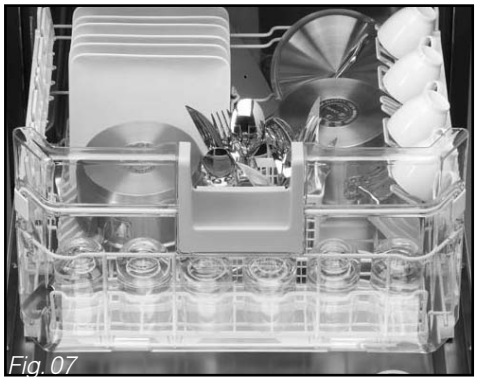
Fig. 07

• *Front Quattro rack*

This removable rack in the upper drawer can be used for cups and long utensils and cutlery. *Fig 08*
To facilitate the stacking of knives, ladles and other large items of cutlery, you can fit the on the “QUATTRO” rack the 6 transparent holders supplied along with your “Quattro CONCEPT” documents. *Fig 09*

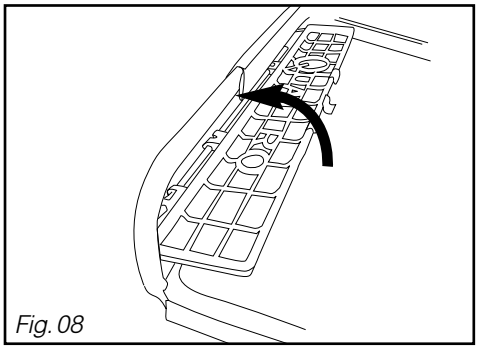
Fig. 08

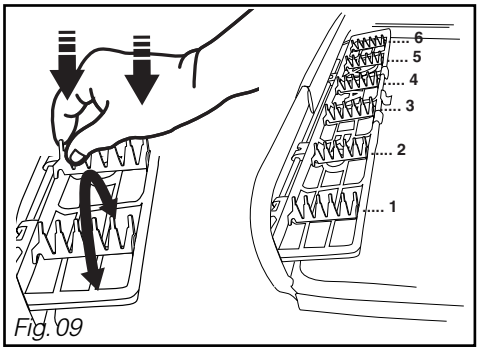

Fig. 09

• *Side racks*

- The four foldable racks in each drawer can be used for cups, long utensils and cutlery, and stemware.
- The rack can be unclipped and clipped back into the desired position to move it from upper position to lower position. *Fig 10*
- upper position, vertical rack *Fig.11*: more space for loading plates.
- upper position, inclined rack: for cups, long utensils and cutlery, and stemware.

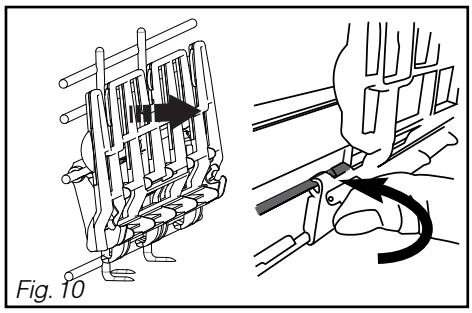
Fig. 10

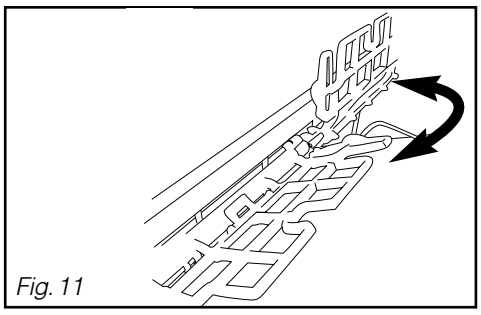
Fig. 11

Advice:
Position the cavities of glasses, cups or bowls facing downwards.

• *Glass wires*

The front of each drawer features a foldable, collapsible wire to support glasses. *Fig 12*

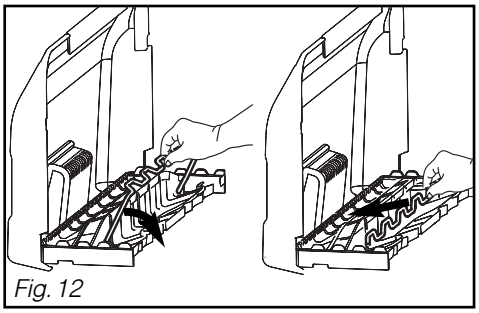
Fig. 12

• Rack for large plates

Some large dishes (for example, “presentation” dishes) will not fit in the drawers in the normal position. In the top drawer, move the central support wire and raise the rack for holding large plates (up to 285 mm) into an inclined position in the drawer's central section. *(Fig.13-14)*

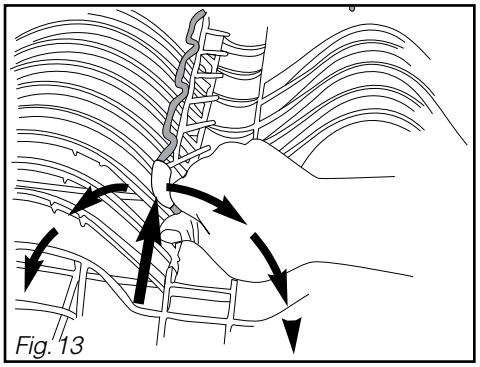
Fig. 13

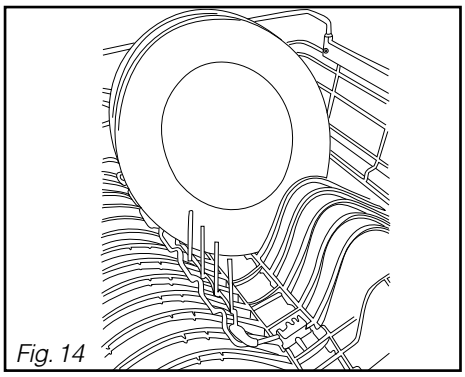
Fig. 14

• The cutlery basket

The QUATTRO CONCEPT Dishwasher has 4 cutlery baskets.

These may be arranged in many positions:

- It is preferable to use 2 cutlery baskets in each drawer. (see fitting locations in *Fig. 15*)

- Other fitting locations are possible, depending on the length of the cutlery.

Movable grills are available for if you wish to load your cutlery in an orderly manner *(Fig. 16)*
For optimum washing and drying, use these separation grills partially or totally.
Point the handles on the cutlery downwards.

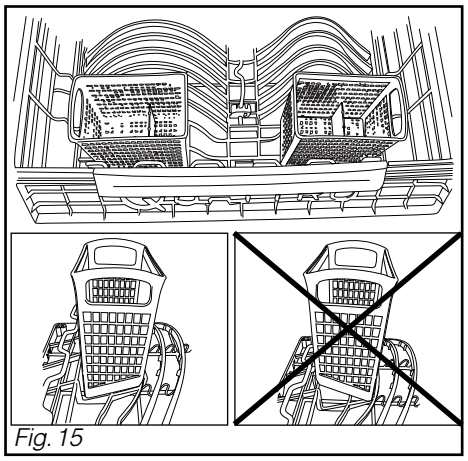
Fig. 15

Important :

For safety reasons, we recommend that you place knives with pointed ends with the point facing downwards in the cutlery basket (to avoid the risk of an accident).
Long-blade knives and other sharp kitchen utensils must be loaded flat in the upper drawer.
Avoid washing cutlery with horn handles in your dishwasher.
Separate silverware from other metals using the separation grill.

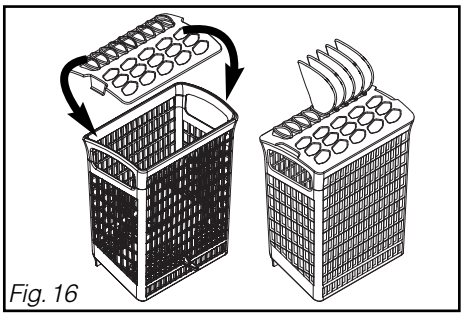
Fig. 16

• *PROGRAMMES TABLE*

PROGRAMMES :	BOOST	ICS	Normal	ECO
ITEM TYPE (porcelain, pans, cutlery, glasses) FOOD RESIDUE: Quantity, type and amount	**Very dirty** A large amount of dried-on residue, baked-on stains, grease, residue from frying, cooked cheese, sauce, etc.	**Automatically detects the amount of washing up and the level of soiling.** Normal amount of dried on residue on everyday items. Faster, but consumes more energy.	**Normally dirty,** Ordinary dishes with a moderate amount of sticky and fatty residues.	
PROGRAMME SEQUENCE	Hot pre-wash Washing at 70°C Rinse Hot rinse Air Drying	Pre-wash Washing at 55/65°C Rinse Hot rinse Air Drying	Pre-wash Washing at 60°C Rinse Hot rinse Air Drying	

Possible modes:	min.	L.	Kwh	min.	L.	Kwh	min.	L.	Kwh
Primo	145	19	1.8	130/140	17/19	1.4/1.6	100	18	1.6
Secundo	110			90/100			75	11	1.1
Tertio	130			110/120			90	13	1.3

	BOOST / ICS			BOOST / CRYSTAL			ICS / CRYSTAL		
	min.	L.	Kwh	min.	L.	Kwh	min.	L.	Kwh
Quattro	145	19	1.8	145	19	1.8	130	18	1.6

ECO	WASH	Crystal +	Quick	Cocktail
Normally dirty Ordinary dishes with a moderate amount of sticky and fatty residues. Faster, but consumes more energy.	**Normally dirty** Ordinary dishes with a moderate amount of sticky and fatty residues. Washing at low temperature, economical and particularly suitable for compact – enzymatic detergents.	**For glasses and delicate crockery** Meaning a smaller quantity of not very sticky residues.	**Very short** wash specially designed for a small amount of daily items with a limited amount of non-greasy residue, not dried on.	**Very quick washing, without washing products, in 15 minutes,** of a load of lightly soiled dishes (for example, after an aperitif), after preheating.
Pre-wash				Preheating
Washing at 55°C	Washing at 50°C	Washing at 45°C	Washing at 45°C	Washing at 60°C
Rinse	Rinse	Rinse	Rinse	
Hot rinse	Hot rinse	Hot rinse	Hot rinse	
Air Drying	Air Drying	Air Drying	Natural drying	Natural drying

min.	L.	Kwh	min.	L.	Kwh	min.	L.	Kwh	min.	L.	Kwh	min.	L.	Kwh
150	17	1.5	180	14	1.05	85	15	1.1	45	12	1.0			
120			110			75			45	8				
150			150			85			45	9		15		

These values refer to normal operating conditions using separate products (detergent, salt, rinsing agent).
They may vary according to the load, water temperature, softener setting, presence of rinsing agent and the supply voltage.
They are increased 0 to 30 minutes when multi-function tablets are used.
On the other hand, the cycle time can be reduced by up to 40% by using Secundo and Tertio modes.

Fig. 02-A

Tip:
Consult the programme table on the previous pages to determine the best combination of programmes for your needs according to the distribution of your dishes, the type of dishes and the degree of soiling.

• *Starting up the machine:*

Press the "On/Off" button A to switch on the machine.

• B *Choosing the drawer(s) to be washed and the associated programme(s):*

Upon start-up, by default, the associated drawer and programme combination(s) are those that you use the most frequently. To select another combination, press the corresponding button.

Press it a second time to select another programme or another combination of programmes:

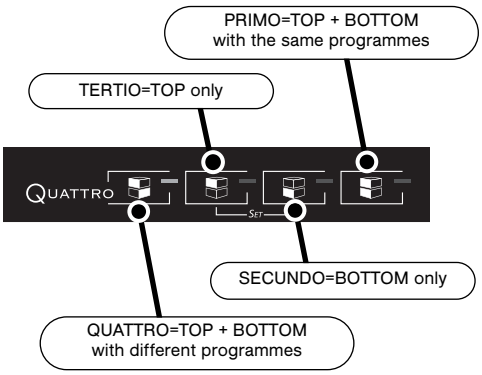

Note:
After a few "training" cycles, your QUATTRO CONCEPT dishwasher will automatically suggest your preferred programme.

- Depending on the mode selected, some programmes or combinations of programmes will not be accessible.

- A short audible signal (beep) confirm the button's selection, except for the "On/Off" button.

• *Immediate starting a programme:*

Simply press the ***Start/C*** G button and the programme will start up as soon as the door is closed.

Time remaining in programm : 1:12

• *Delayed programme start:*

Select the programme then programme end time, 15 minutes at a time, by pressing **+** or **–** F until the desired time is displayed.
Confirm by pressing "Start/C" G.
The time on the screen will count down until the programme starts.

Time of end of programme: 14:30

Display of remaining programme time at cycle start-up 1:12

"Cocktail" Preheating:

The **"Cocktail"** programme is started by a pressing on the button a number of times until the **"Cocktail"** light lights up.

Once you have selected a **"Cocktail"** programme, the "" icon appears.

Press the **"Start/C"** button G to start preheating, which lasts approximately 30 minutes, and close the door.

At the end of preheating, load the glasses, cups, etc. in the upper drawer, press **"Start/C"** G again to start up the **"Cocktail"** rinsing.

You can stop preheating and start the **"Cocktail"** programme at any time by pressing **"Start/C"** .

Preheating started: On

Time remaining in programm : 0:15

Tip:
During the "Preheat" function of your QUATTRO CONCEPT Dishwasher, your machine will automatically prepare to run the coktail rinsing cycle, which you can start when you wish. This will reduce the cycle time. You will be able to perform a "Cocktail" cycle in 15 minutes.

• *Switching off the appliance:*

When the programme is finished, press "On/**Off**" A.

End of programme StoP

• SAFETY SYSTEMS

• Door poorly closed

After confirming the programme ("Start" button), your dishwasher issues three short high-pitched beeps to indicate that the door is not closed and the light for the selected programme flashes.

• Programme access lock

Throughout the period the programme is running, or the full duration of the programme, the programme selector and the buttons are automatically protected from any kind of manipulation. This unlocks automatically at the end of the programme or when the programme is cancelled by holding down the "Start" button for 2 seconds.

• Advice on cleaning the filters

Approximately every month, your dishwasher advises you to proceed to service the filters (see Section "Cleaning the waste filters" - *Fig. 13-14).*

- The following message will be displayed on the screen : FiLt

• Anti-overflow system

This system activates the drain pump automatically if the water in the tank reaches an abnormal level.

• Anti-leak protection system

This system cuts off the water supply if a leak is detected under the appliance.

• Total safety

This supply pipe is fitted with a device to cut off the water supply directly at the tap if there is a leak.

• The warning light

Error in programme or incident (refer to para 13 'Operating faults').

- In the event of a fault, the screen will display the fault code: d08

• *CLEANING THE WASTE FILTERS*

The filtration system consists of several elements:

Ⓐ - The waste filter

Ⓑ - The large main filter

Ⓒ - The micro filter

The filters are located in the centre of the tub and must be washed regularly to obtain optimum washing results.

Actions :

① Before removing the filters, remove any waste on the large main filter Ⓑ with a sponge so that the waste does not block the sprinkler arms. Rotate the spray Ⓓ arm as shown in the drawing. (Fig. 17)

② Loosen the waste filter a quarter of a turn and then remove it Ⓐ

③ Remove the main filter Ⓑ

④ Remove the micro filter Ⓒ

⑤ Carefully clean filters Ⓐ, Ⓑ and Ⓒ under running water (Fig. 18)

Re-installation:

Proceed in reverse order, inserting filters Ⓒ and Ⓑ and then Ⓐ

Important :

Remember to lock the waste filter Ⓐ in place by pushing it in fully and turning it a quarter turn.

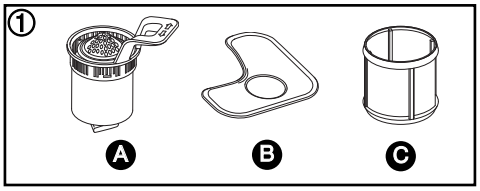

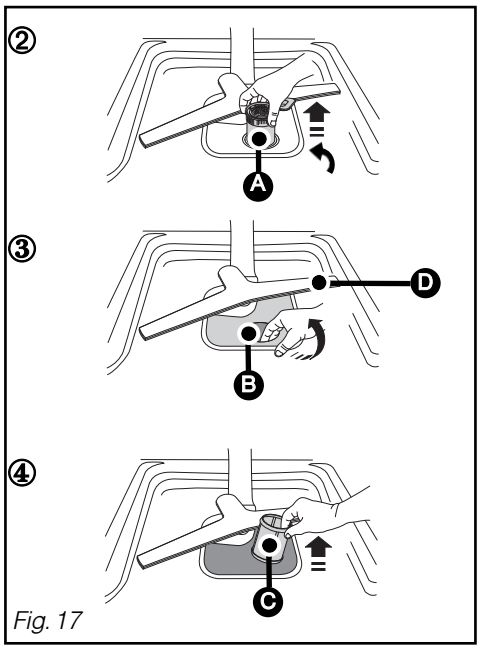

Fig. 17

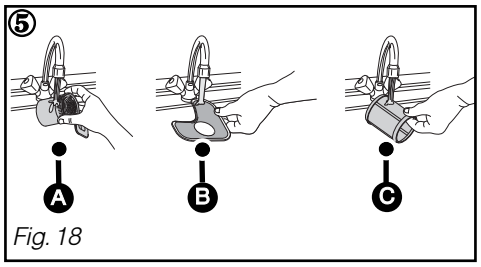

Fig. 18

• *Periodically :*

Every 3 or 4 months, in order to remove any deposits, run a special maintenance programme, without any items in the machine, using a commercially available special dishwasher cleaning product.

Important :

Keep this product out of children's reach..

• *Prolonged stoppage*

Clean your dishwasher completely and then unplug it from the electricity supply and close the water tap. Protect your machine from potential frosts

Advice :

Do not use abrasive powders, metal sponges and alcohol-based or thinner-based products. Use a cloth or a sponge.

If you are moving house, run a soaking programme first of all, in order to avoid any water escaping.

• *Cleaning and upkeep of your appliance*

To keep your appliance in good working order, we recommend that you use **Clearit** household products.

Professional expertise for the general public

Clearit offers you professional products and adapted solutions for the daily upkeep of your household and kitchen appliances.
You may find them in conventional retail outlets, along with a complete line of by-products and consumables.

• SUMMARY OF THE FAULTS

d01 : water supply fault (tap)	**d07 :** overflow / anti-leak fault
d02 : draining fault	**d08 :** sprinkling distribution fault
d03 : heating fault	**d11 :** pressure sensor fault
d04 : temperature fault	**d12 :** filling fault (water inlet detection system)
d05 : faulty motor	**d13 :** faulty heating
d06 : faulty motor	**d14 :** installation fault : (incorrect drainage connection or inadequate flow rate and tap).

Tip:
If one of the above faults occurs and you need to call a repair man, remember to tell him the message displayed (d01, d02..) as this information will help him.

• BEFORE CALLING FOR SERVICE

Problem	*Possible causes*	*What to do?*
The door falls heavily when opened (integratable model)	- Door springs not tensioned enough to compensate for the weight of the panel.	- Tighten the two tensioning screws accessible in the bottom section above the front feet.
The door does not stay horizontal when open or returns too quickly (integratable model)	- Door springs tensioned too much. - No wooden panel.	- Loosen the two tensioning screws accessible in the bottom section above the front feet. - Fit a temporary wooden panel on the appliance and adjust the springs.
The door catches when closing	- Appliance not stable - Door not centred on the tub	- Adjust the feet. - Re-centre by adjusting the rear feet.
The upper basket does not stay in the high position	- Poor manipulation (the basket is being pulled upwards too quickly)	- Act more progressively (see instructions), one side and then the other.
Small leak around or under the appliance (move the appliance to locate the leak)	- Leak from the tap. - Leak from the appliance. (Cf. table fault d07).	- Check that a seal is fitted and retighten the nut. - Close the water tap and call a technician.
Small leak at the door	- Appliance not stable or not level - Door not centred on the tub.	- Adjust the feet. - Re-centre by adjusting the rear feet.

• THE INDICATOR LIGHTS

Problem	Possible causes	What to do?
The salt light does not go out	- No salt or an insufficient quantity of salt in the tank to trigger the float.	- Refill the tank and wait for the cycle to end. If you have soft water that requires no salt, the light is constantly lit.
The lights all light up one after the other A light flashes and the programme does not start	- Wrong programme. - Programme selector wrongly positioned (between two notches)	- Cancel the current programming by holding down the Start button for 3 seconds and then re-programme. - Reposition the selector on a programme.

• RELATING TO PROGRAMMING, DISPLAY

Problem	Possible causes	What to do?
The cycle lasts too long	- The energy-saving programmes last longer because the agitation and drying times are longer to compensate for the lower washing and drying temperatures	- Use these programmes preferably at night when it is not so important how long the programme lasts or when it ends.
The appliance trips the circuit breaker	- Insufficient amperage to supply all the appliances being operated simultaneously. - Internal fault in the appliance.	- Check the socket's amperage (10A minimum) and the meter's capacity. - Call a technician.
The appliance does not start	- No mains power to the socket. - Tap closed (Cf. table fault d01). - Water supply hose kinked. - Selection error or programme blocked. - Start button pressed too long (greater than 2 secs). - Appliance in Safety mode (anti-leak) (Cf. table fault d07).	- Check the socket and the fuse - Check the tap is open. - Check the hose line is OK. - Cancel by holding down Start for 3 secs and re-programme. - Just press Start briefly to start the programme. - Call a technician.

Problem	Possible causes	What to do?
The appliance will not restart	- Door opened during a washing cycle.	- Wait for the time delay to end (controlled internally by the appliance).
The appliance does not drain (Cf. table fault d02).	- The cover has not been removed from the sink's U-bend. - Drain hose kinked. - Filters totally blocked. - Pump blocked.	- Remove the cover. - Check the drain hose line behind the machine is OK. - Remove and clean the filters and the drain. - Initiate a Soaking programme If the fault persists, call a technician.
The appliance will no longer function (see table, fault 14).	- installation of non-compliant drainage system: drainage too low down or pipe pushed too far in. - siphoning: the appliance is emptying as the same time as it is filling up.	- adhere to the drainage tube installation dimensions.

• POOR WASHING RESULTS

Problem	Possible causes	What to do?
Food traces and deposits in the glasses	- Items poorly arranged (masked by another larger item or situated underneath it, items nested or jammed together). - Upper spray arm blocked by cutlery or a dish etc. - Filter poorly locked and lifting during washing. - Micro filter screen clogged. - One or more holes in the spray arm blocked.	- Arrange the items properly. Use the most appropriate areas and accessories for each type of item (see instructions). - Check that the spray arm rotates freely. Set the basket in the high position if necessary. - Check the filter's facing and that the filter is locked in place (push it in fully, turning it to the right). - Remove all the filters and clean them (in warm water), including the micro filter's screen (once a month). - Remove the spray arm by turning the lever a quarter of a turn and clean it under the tap (do not use any tool that could damage the holes). Re-install the spray arm.
Traces of grease	- Detergent dose too low; inefficient detergent; stale product. - Inappropriate programme (temperature too low; duration too short).	- Increase the dose; try another detergent. - Select a programme with a higher temperature.

• POOR WASHING RESULTS...

Problem	Possible causes	What to do?
White marks (identify what type)	- Chalky film (removable with vinegar). - Traces of salt (items have a salty taste).	- Check that there is salt in the tank (light unlit = OK). - Check the water hardness at the tap and that the water softener is set correctly. Adjust it to a higher level if necessary. - Water too hard for using a "4-in-1" detergent without the addition of salt. - Check that the stopper on the salt container is closed correctly.
White marks (identify what type)	- Glass cloudy because water too soft (cannot be removed).	- Check the water hardness at the tap and that the water softener is set correctly. Some detergents in pellet form are more aggressive to glasses and decorations (change the product and use a protective product if necessary).
Coloured marks (tea, wine, coffee)	- Items poorly arranged - Detergent dose too low; inefficient detergent - Programme temperature too low. - If you use a multifunction product.	- Turn the cavities in the items towards the jets. - Increase the dose; try another detergent. - Select a more suitable programme with a higher temperature. - Use the "4-in-1" option (depending on the model).
Streaks or dried droplets on glasses	- Lack or insufficient amount of rinsing product. - Rinsing product out-of-date or inefficient. - If you use a multifunction product.	- Check the indicator light and fill the tank completely. Adjust the dispensing unit to a higher position if necessary. - Use a recent product (a good product dilutes easily and foams in cold water). - Use the "4-in-1" option with a setting prioritizing drying (parametering from the menu – depending on the model).
Dried-on marks on glasses, dullness.	- If you use a multifunction product.	- Use the "4-in-1" option with a setting prioritizing brilliance (parametering from the menu – depending on the model).

• POOR OPERATION

Problem	Possible causes	What to do?
Constant filling A lot of waste on the large filter at the end of the cycle.	- Drain hole situated too low for the appliance (Cf. table fault d012). - The filters and drain outlets are blocked with too much residue.	- Drain wand has fallen on the floor. - Remove and clean the filters and the bottom of the drain outlets. Remove large residue from the plates before putting them in the machine.
Traces of rust on stainless steel	- Quality of the stainless steel ; not dishwasher-safe (knives in particular)	- Use “special dishwasher-safe” cutlery. - Check that the lid on the salt container is closed correctly.

• POOR DRYING RESULTS

Problem	Possible causes	What to do?
A lot of droplets on the glasses	- Lack or insufficient amount of rinsing product. - The dose has not been distributed. - Positioning of the items.	- Check the indicator light and fill the tank completely. - If the tank is not empty after approximately 60 washings, call a technician. - Arrange the items to restrict water retention as much as possible. Leave the door ajar for a few minutes, if possible
Droplets on plastic items, Tefal coatings, etc.	- These items have a low calorific mass.	- arrange them carefully, giving preference if possible to the top drawer.
Poorer drying on rapid programmes	- On rapid programmes, the drying temperature and drying period are reduced to cut down the duration of the cycle as much as possible.	- Leave the door ajar for a few minutes.
Condensation on the wall of the inside door or the tub.	- Condensation may form on the walls, particularly after the appliance has cooled down (sound insulation increases this occurance)	

• CHANGING THE BULB

You can change the bulb (halogen type G4-12V-5W) located on the left under the top cover. To do this:

Important :
Unplug the power cable before changing the bulb.

- If your machine is fitted with a top tray:

– Remove the top cover by unscrewing the two screws under the top cover's lip *(Fig. 19* A).
– Remove the top cover by unclipping it from the back of the appliance and then pushing it a few centimetres *(Fig. 19* B).
– Lift off your dishwasher's top cover (*Fig. 19* B).

- If your machine is flush-mounted beneath a work surface:

– unscrew the screws at the front of the machine, under the work surface.
– partially pull out the machine.

Then, in every case:
– Remove the 2 top screws from the protective plate and remove the plate (*Fig. 19* C).

Important:
For safety reasons, do not touch the two other screws.

– Open the cover by pinching the 2 clips (*Fig. 19* D).
– Remove the bulb/bulb holder assembly from its housing (*Fig.19* E).

Important:
Use a soft cloth to manipulate the bulb.

– Change the bulb by freeing it from its housing (*Fig.19* F).
– To re-install the bulb, follow the above instructions in reverse order.

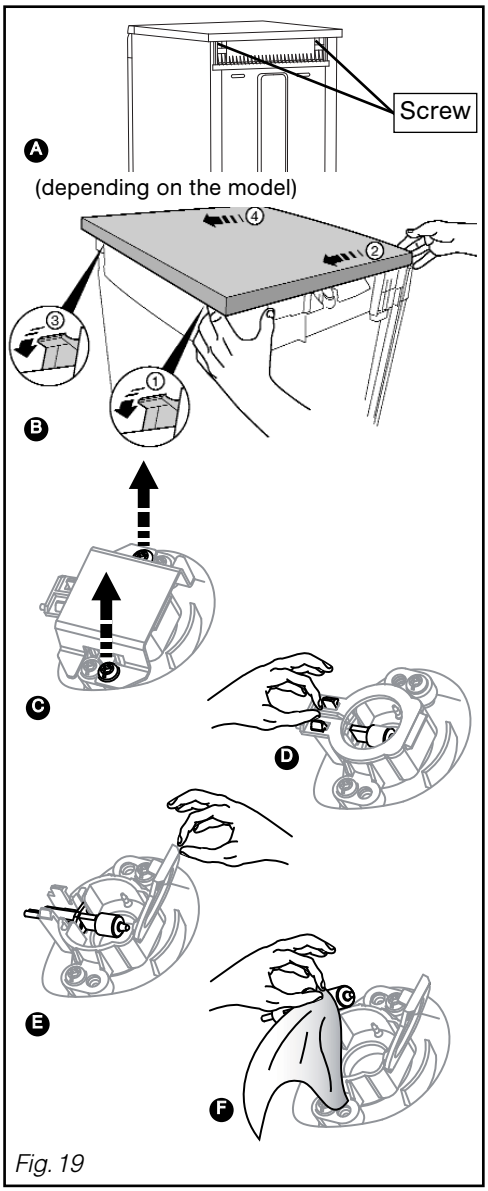

Fig. 19

• *INTERVENTION WORK*

Any intervention work on your appliance must be performed by a qualified professional approved by the manufacturer. When you call, please mention the full reference for your appliance (model, type and serial number). This information is shown on the description plate (see *Fig. 20)*

ORIGINAL PARTS

When maintenance is being carried out, ask for only certified original spare parts to be used.

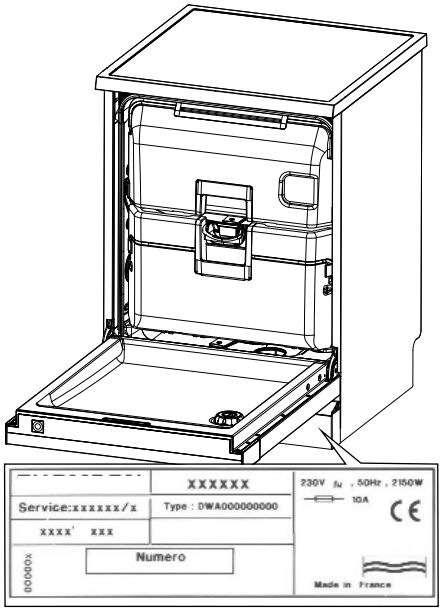

Fig. 20

15/ INDICATIONS FOR THE TESTING LABORATORIES

• *Common data*

– Washing capacity ---------- 12 standard plates
– Dish storage ---------- fig. A-B-C see next page

The plastic plate holders in all of the drawers need to be in the "forward" position. To do this:
- unclip the back left and back right of the plastic rack.
- Pull forwards whilst lifting the plastic rack (about 1cm)
- Clip the plastic rack back in.

Remove the cutlery separator from all the cutlery baskets (fig.B.1)

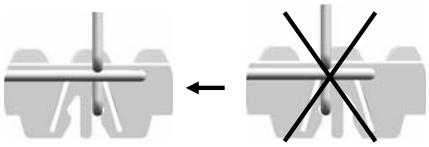

• *Dish loading performed according to the instructions on the next page, with:*

- Top drawer Fig.A:
  - Only the 2 Right Cup Racks are used
  - Front "Quattro" racks + 6 holders
  - Row no.① Glass Guard removed
  - Glass Holder Row number ② kept under the plastic plate rack
  - Large Plate Central Guard removed
  - 2 Left Cup Racks removed

- Bottom Drawer Fig.C:
  - Only the 2 Left Cup Racks are used
  - Row no.① Glass Guard left in place
  - Row no.② Glass Guard left in place
  - Large Plate Central Guard removed
  - 2 Right Cup Racks removed

– Setting the rinsing product distributor: ---------- 3
– Setting the softener ---------- H2

For detailed information on the comparative tests dealing with the degree of soiling, the type of dish and cutlery, etc., contact the appliance manufacturer before the start of the tests.

• *Test conducted according to the EN 50242 standard:*

– Recommended programme ---------- **"2 Drawer WASH"**
– Washing product dosage ---------- 30 g B washing powder

• *Test conducted according to the IEC 436/DIN 44990 mixed method:*

– Recommended programme ---------- **"ECO 2 Drawers"**
– Washing product dosage ---------- - 5 + 25g washing powder C

NB: for tests with multipurpose tablets:
- Make sure the softener is set correctly to H0 or H1 according to the water hardness.

• *Noise measurement according to the EN60704-2-3 standard:*

– Line up the flush fitting casing plinth with the door panel.

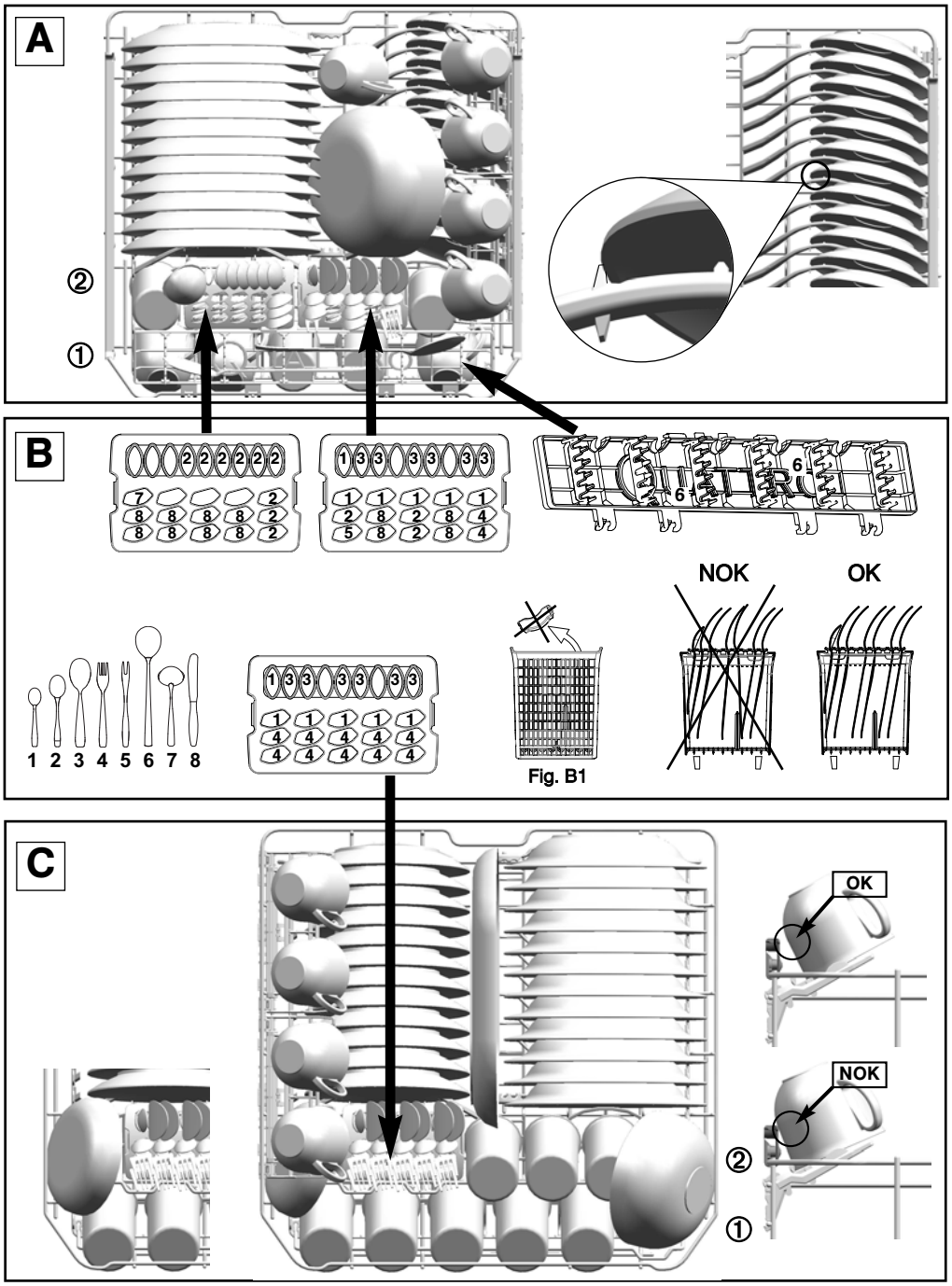
A
②
①
B
1 2 3 4 5 6 7 8
NOK
OK
Fig. B1
C
OK
NOK
②
①

NOTES

NOTES

EN After Sales Service:

Any maintenance on your equipment should be undertaken by:
- either your dealer,
- or another qualified mechanic who is an authorized agent for the brand appliances.

When making an appointment, state the full reference of your equipment (model, type and serial number). This information appears on the manufacturer's nameplate attached to your equipment.

FR Service après vente :

Les éventuelles interventions sur votre appareil doivent être effectuées :
- soit par votre revendeur,
- soit par un autre professionnel qualifié dépositaire de la marque.

Lors de votre appel, mentionnez la référence complète de votre appareil (modèle, type et numéro de série). Ces renseignements figurent sur la plaque signalétique fixée sur votre appareil.

DE Kundendienst :

Eingriffe an Ihrem Gerät dürfen nur:
- von Ihrem Händler oder
- von einem sonstigen Fachmann und Vertragshändler der Marke durchgeführt werden.

Geben Sie bei der Meldung einer Störung die vollständige Typenbezeichnung Ihres Gerätes an (Modell, Typ, Seriennummer). Diese Angaben finden Sie auf einem an Ihrem Gerät angebrachten Schild.

ES Servicio postventa :

Las intervenciones que requiera la máquina deberán ser efectuadas:
- por el revendedor,
- o por cualquier profesional cualificado depositario de la marca.

Al llamar, mencione la referencia completa de la máquina (modelo, tipo y número de serie). Estos datos figuran en la placa de identificación situada en la máquina.

PT Serviços autorizados :

Qualquer intervenção no seu aparelho deve ser realizada:
- quer pelo seu revendedor,
- quer por outro profissional qualificado autorizado pela marca.

Ao chamá los, indique a referência completa do seu aparelho (modelo, tipo e número de série). Estas informações figuram na placa de identificação fixada no aparelho.

DA Kundeservice :

Eventuel vedligeholdelse af apparatet skal foretages:
- enten af Deres forhandler,
- eller af en kvalificeret fagmand, som er anerkendt til dette mærke.

Når De ringer op, skal De angive apparatets fulde reference (model, type, serienummer). Disse oplysninger står på typeskiltet, der sidder på apparatet.

NL Serviceafdeling:

De eventuele ingrepen in de machine moeten worden uitgevoerd :
- of door uw vakhandelaar,
- of door een andere gekwalificeerd technicus van dit merk.

Tijdens het telefoneren, dient u de complete referentie op te geven van uw machine (model, type, serienummer). Deze informatie staat op het typeplaatje op de machine.

PL Usługi serwisowe :

Wszelkie czynności serwisowe wykonywane na urządzeniu muszą być wykonane przez:
- sprzedawcę,
- wyspecjalizowany zakład naprawczy posiadający atest producenta.

Aby przyspieszyć i ułatwić obsługę prosimy o podanie dokładnych danych dotyczących urządzenia (model, typ, numer seryjny). Wszystkie te dane znajdują się na tabliczce znamionowej umieszczonej na urządzeniu.

CS Záruční servis:

Případné opravy na přístroji může provádět pouze :
- váš prodejce
- nebo záruční opravna, která má smlouvu s výrobcem

Při telefonickém styku uvádějte úplné označení vašeho přístroje (model, typ a výrobní číslo). Tyto údaje jsou uvedeny na výrobním štítku přístroje.

RU Сервисное обслуживание:

При необходимости ремонта Вашей машины, он должен производиться:
- либо тем, кто ее продал Вам;
- либо специалистом, имеющим квалификацию по ремонту данной модели.

При обращении в службу ремонта укажите все данные Вашей машины (модель, тип и серийный номер). Эти данные указаны на идентификационной табличке, закрепленной на устройстве.

EL Τεχνική υποστήριξη:

Οι ενδεχόμενες επεμβάσεις πάνω στη συσκευή σας θα πρέπει να διενεργούνται:
- είτε από τον προμηθευτή σας,
- είτε από το κατά τόπους εξουσιοδοτημένο σέρβις.

Σε περίπτωση που τηλεφωνήσετε, θα πρέπει να αναφέρετε όλα τα στοιχεία της συσκευής σας (μοντέλο, τύπο και αριθμό σειράς).Τα στοιχεία αυτά αναγράφονται στην ετικέτα των χαρακτηριστικών του κατασκευαστή που βρίσκεται πάνω στη συσκευή.

B5635D- 1/4-04/08

FagorBrandt SAS, locataire-gérant – SAS au capital social de 20 000 000 euros RCS Nanterre 440 303 196.

Photographie de couverture/front cover photography: Michel Gibert

DQH740JE1